4K Ultra-Low Light Dome Camera

Key Features

- 8.29 MP high performance COMS
- Ultra-low light
- 3840 × 2160 resolution
- 2.8 mm, 3.6 mm, 6 mm fixed focal lens
- 120 dB true WDR, 3D DNR
- EXIR 2.0, smart IR, up to 40 m IR distance
- IP67, IK10
- Up the coax (HIKVISION-C)

Specification

Camera	
Image Sensor	8.29 megapixel progressive scan CMOS
Signal System	PAL/NTSC
Frame Rate	PAL: 8 MP@12.5fps, 5 MP@20fps, 4 MP@25fps, 1080p@25fps NTSC: 8 MP@15fps, 5 MP@20fps, 4 MP@30fps, 1080p@30fps
Resolution	3840 (H) × 2160 (V)
Min. illumination	Color: 0.003 Lux@(F1.2, AGC ON), 0 Lux with IR
Shutter Time	PAL: 1/12.5 s to 1/10,000 s NTSC: 1/15 s to 1/10,000 s
Slow Shutter	Max. 16 times
Lens	2.8 mm, 3.6 mm, 6 mm fixed focal lens
Horizontal Field of View	102.2° (2.8 mm), 79°(3.6 mm), 50.8°(6 mm)
Lens Mount	M12
Day & Night	IR cut filter
Angle Adjustment	Pan: 0° to 355°, Tilt:0° to 75°, Rotate: 0° to 355°
Synchronization	Internal synchronization
WDR (Wide Dynamic Range)	120 dB
Menu	
AGC	Support
Day/Night Mode	Auto/Color/BW (Black and White)
White Balance	Auto/Manual/Natural
Privacy Mask	ON/OFF, 4programmable privacy masks
BLC (Backlight Compensation)	Support
3D DNR (Digital Noise Reduction)	Level 1 to 10
Language	English
Functions	Contrast, Sharpness, Saturation, Mirror, Defog, HLC
Interface	
TVI Video Output	1 HD analog output
CVBS Video Output	1 CVBS output (75Ω/BNC)
General	
Operating Conditions	-40 ℃ to 60 ℃ (-40 ℉ to 140 ℉), humidity: 90% or less (non-condensation)
Power Supply	12 VDC±25%
Power Consumption	Max. 4.8 W
Protection Level	IP67, IK10
Material	Metal
IR Range	Up to 40 m
Communication	Up the coax, Protocol: HIKVISION-C (TVI output)
Dimensions	Ø 111 mm × 82.4 mm (Ø 4.4" × 3.2")
Weight	Approx. 450 g (0.99 lb.)

Dimension

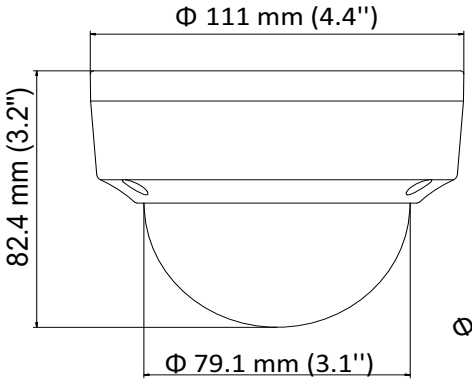

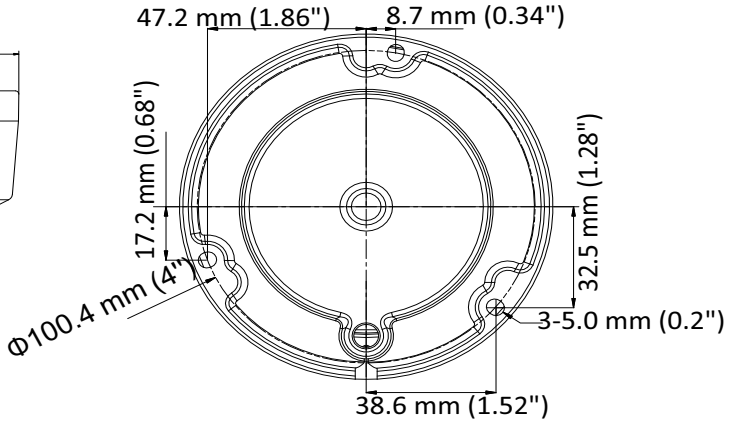

Accessory

Inclined Ceiling Mounting Bracket

Pendant Mounting Bracket

Wall Mounting Bracket

Vertical pole mounting Bracket

Junction Box

Wall Mounting

Video Balun